THIS DRAWING IS UNPUBLISHED. RELEASED FOR PUBLICATION -,- .
© COPYRIGHT - BY TYCO ELECTRONICS CORPORATION. ALL RIGHTS RESERVED.

LOC	DIST
DF	DO

REVISIONS

P	LTR	DESCRIPTION	DATE	DWN	APVD
	N	REV PER ECO-08-020669	14OCT08	PK	BW

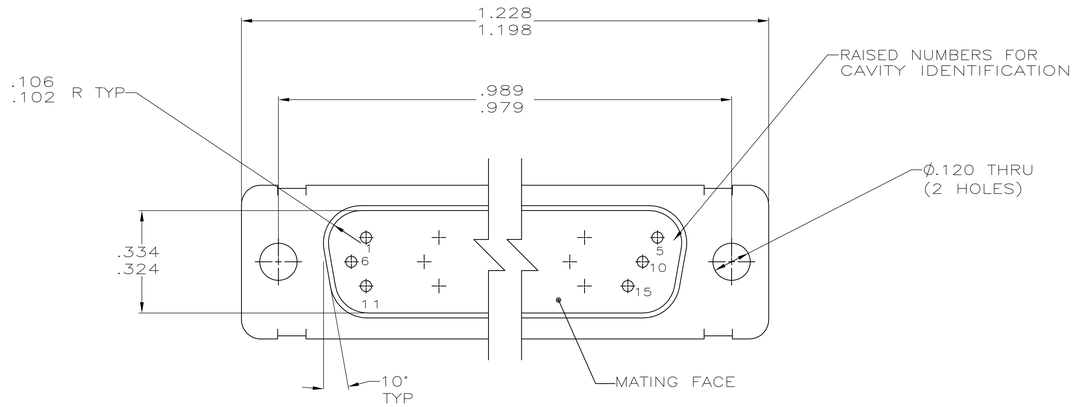

1. THIS PLUG WILL MATE WITH ANY SIZE 1, 15 POSN. RCPT. IN AMPLIMITE SERIES.
2. CONNECTOR SUPPLIED WITHOUT CONTACTS; SHOWN FOR ILLUSTRATION ONLY.
3. BE-CU RETENTION CLIPS ARE INCLUDED IN INSERT AND INSTALLED WITH TINES POINTING TOWARDS MATING FACE.
4. OVERALL DIMENSIONS DO NOT INCLUDE RAISED CAVITY IDENTIFICATION.
5. MARKING FAR SIDE REFERS TO WIDE SIDE OF KEYSTONE. NEAR SIDE REFERS TO NARROW SIDE OF KEYSTONE
6. ONLY PART NO. 211673-7 IS SUPPLIED WITH CONTACTS.
7. 100% INSPECTION REQUIRED PER BOEING 1B01:
   A. VISUAL
   B. DWV
   C. IR
8. CUSTOMER REQUIRES SINGLE LOT DATE CODE.
9. SPECIAL REQUIREMENTS:
   A.TEST TWO CONNECTORS PER LOT FOR COMPLIANCE TO GROMMET PEEL STRENGTH REQUIREMENTS.
   B.TEST ALL CIRCUIT CAVITIES FOR MISALIGNMENT OR EXCESSIVE ADHESIVE.

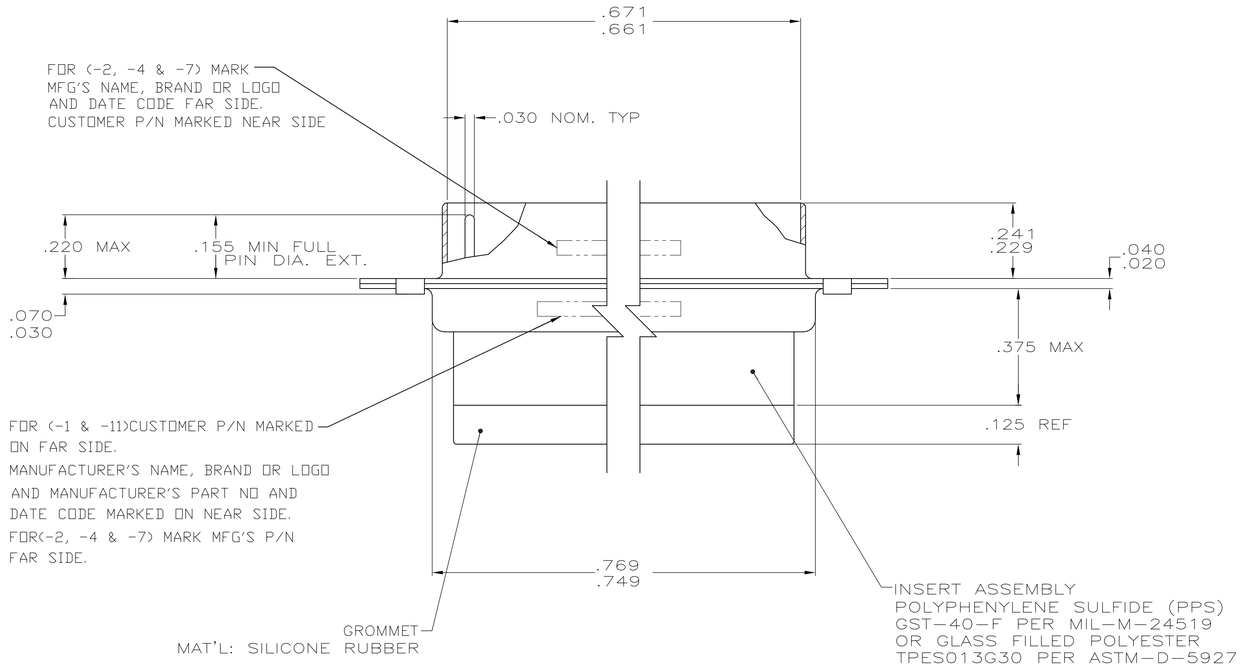

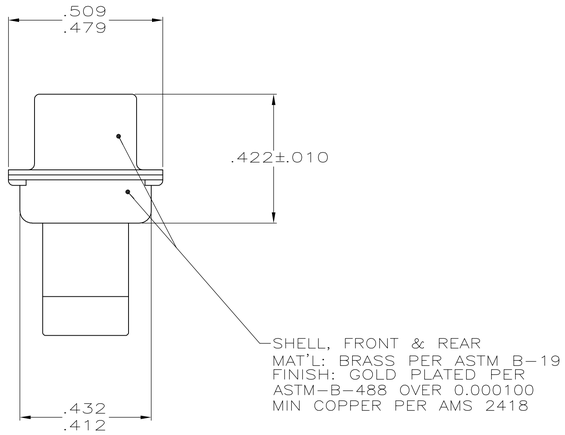

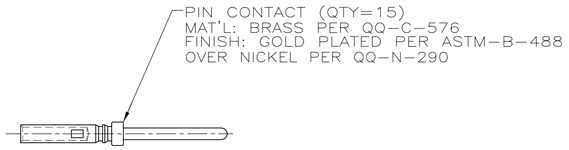

REMARKS	CUSTOMER PART NO.	PART NO.
7 8	1B01-031PHW	1-211673-1
6	B010648-0001	211673-7
—	—	211673-4
9 8	2A065-013V	211673-2
7	1B01-031	211673-1

THIS DRAWING IS A CONTROLLED DOCUMENT.

DIMENSIONS: INCHES

TOLERANCES UNLESS OTHERWISE SPECIFIED:
0 PLC ± –
1 PLC ± –
2 PLC ± –
3 PLC ± .005 [0.13]
4 PLC ± –
ANGLES ± –

MATERIAL: SEE CALLOUTS
FINISH: SEE CALLOUTS

DWN J. KAISER 3-11-04
CHK L. OH 3-25-04
APVD –
PRODUCT SPEC —
APPLICATION SPEC —
WEIGHT —

Tyco Electronics
Tyco Electronics Corporation
Harrisburg, PA 17105-3608

NAME: PLUG ASSY, AMPLIMITE, 15 POSN., SIZE 1, SERIES 90, NON-MAGNETIC, SPECIAL WITH GROMMET

SIZE	CAGE CODE	DRAWING NO	RESTRICTED TO
A1	00779	C-211673	—

CUSTOMER DRAWING | SCALE 4:1 | SHEET 1 OF 1 | REV N

AMP 4805 REV 31MAR2000